THE′VENIN’S THEOREM

Any two-terminal, linear bilateral dc network can be replaced by an equivalent circuit consisting of a voltage source and a series resistor

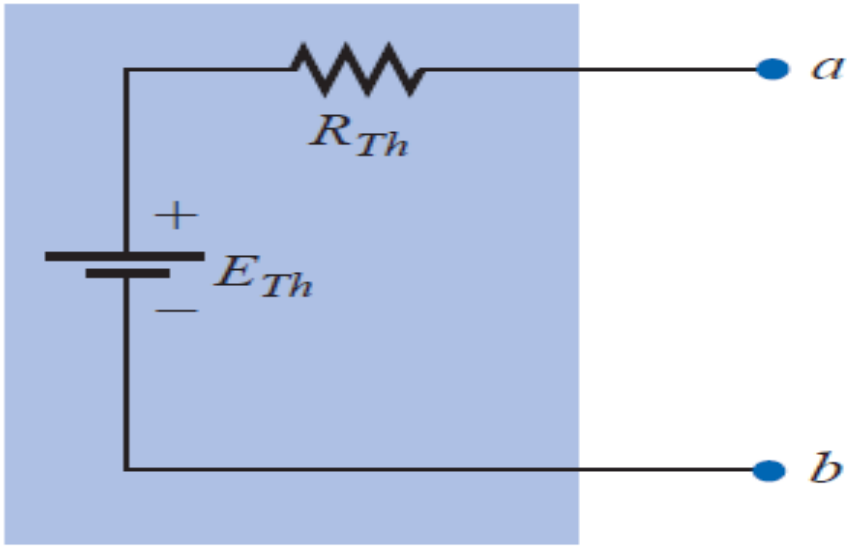

Find the Thévenin equivalent circuit for the network in the shaded area of the network of Following circuit. Then find the current through *RL for values of 2 Ω, 10 Ω, and 100 Ω* .

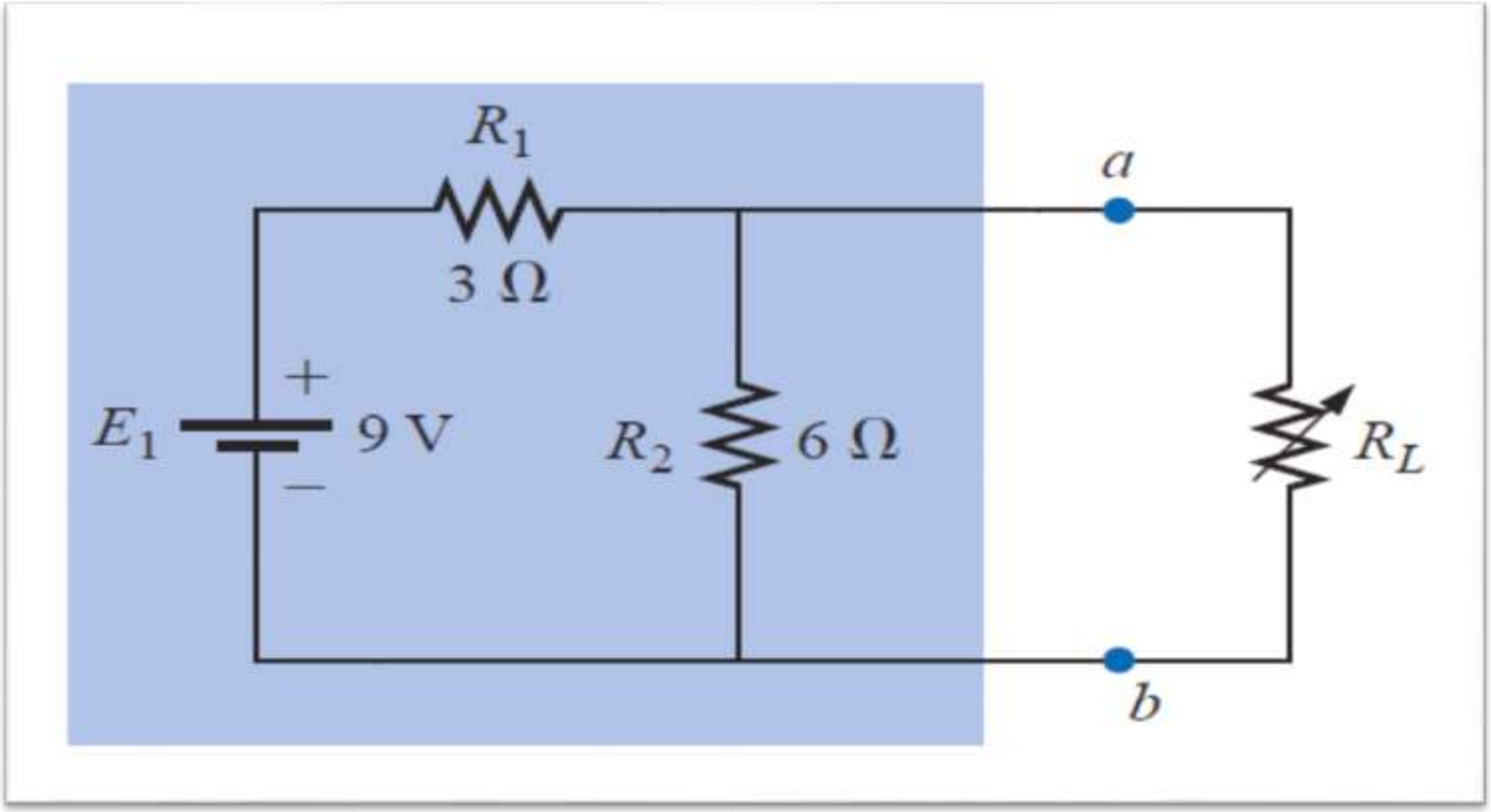

Steps 1 and 2 produce the network of Fig. The load resistor RL has been removed and the two "holding" terminals have been **defined as *a and b.***

Step 3: Replacing the voltage source E1 with a short-circuit equivalent **yields the network of Fig. where**

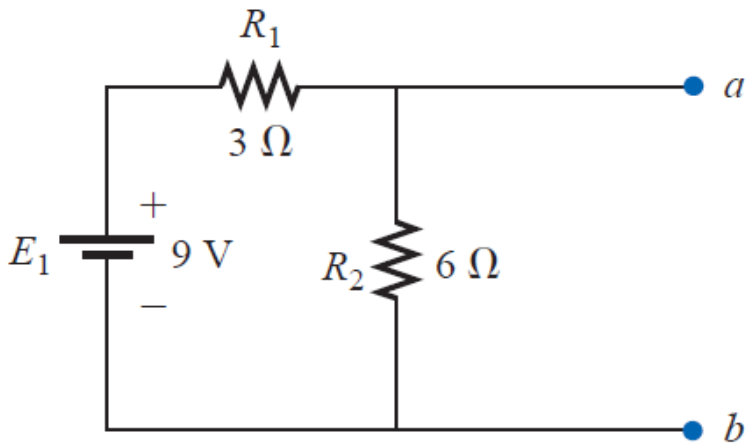

$$R_{Th} = R_1 \parallel R_2 = \frac{(3\ \Omega)(6\ \Omega)}{3\ \Omega + 6\ \Omega} = \mathbf{2\ \Omega}$$

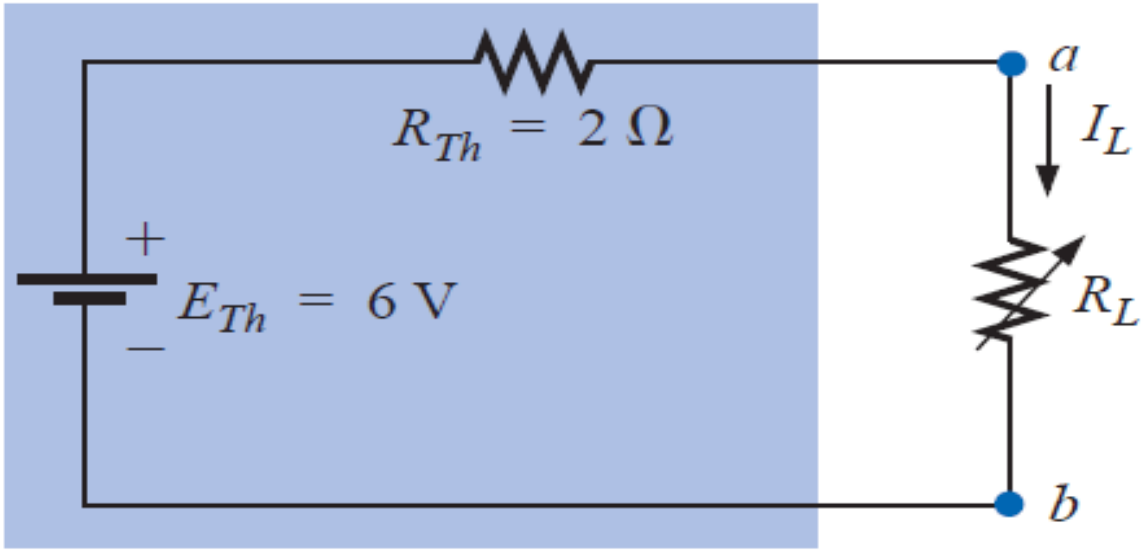

The Thévenin equivalent circuit for the network external to RL in Fig.

$$I_L = \frac{E_{Th}}{R_{Th} + R_L}$$

$$R_L = 2\ \Omega: \qquad I_L = \frac{6\ \text{V}}{2\ \Omega + 2\ \Omega} = \mathbf{1.5\ A}$$

$$R_L = 10\ \Omega: \qquad I_L = \frac{6\ \text{V}}{2\ \Omega + 10\ \Omega} = \mathbf{0.5\ A}$$

$$R_L = 100\ \Omega: \qquad I_L = \frac{6\ \text{V}}{2\ \Omega + 100\ \Omega} = \mathbf{0.059\ A}$$

Example 2

★ **Find the Thevenin's equivalent circuit of the circuit shown in Fig , to the left of the terminals *a-b*. Then find the current through R_L = 6, 16, and 36 Ω.**

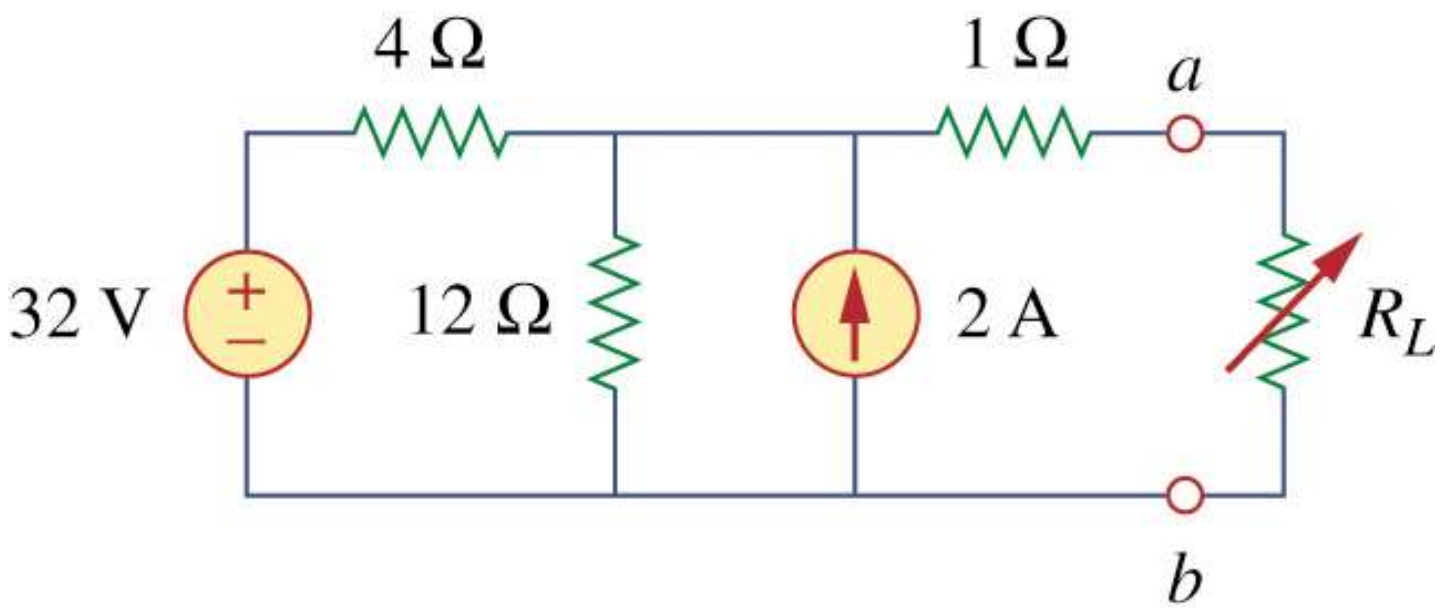

Find R_{th}

$$R_{\text{Th}} : 32\text{V voltage source} \rightarrow \text{short}$$

$$2\text{A current source} \rightarrow \text{open}$$

$$R_{\text{Th}} = 4 \| 12 + 1 = \frac{4 \times 12}{16} + 1 = 4\Omega$$

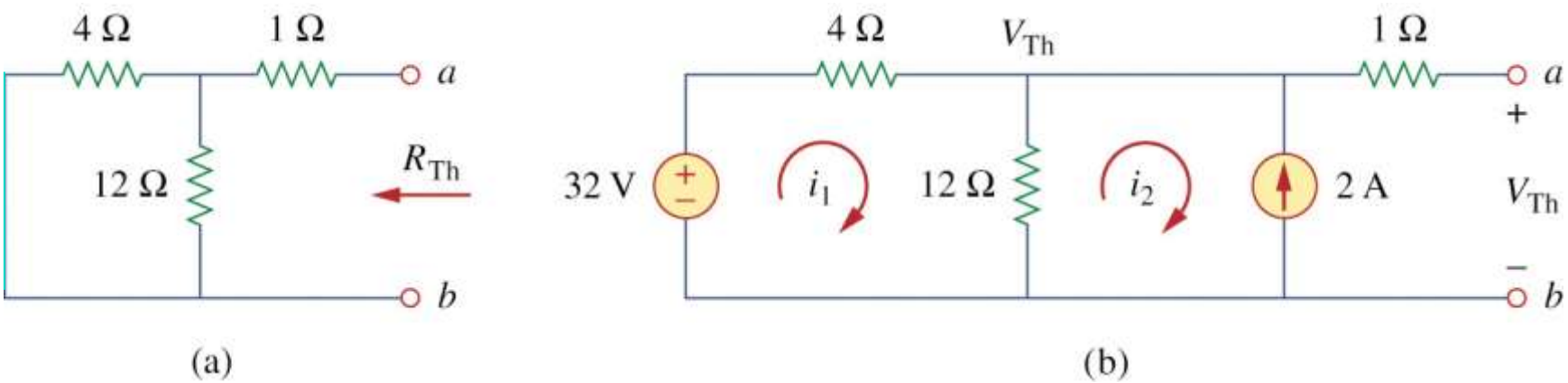

Find V_{th}

V_{Th} :

(1) Mesh analysis

$$32 - 4i_1 - 12(i_1 - i_2) = 0\ ,\ \ i_2 = -2\text{A}$$

$$\therefore i_1 = 0.5\text{A}$$

$$V_{\text{Th}} = 12(i_1 - i_2) = 12(0.5 + 2.0) = 30\text{V}$$

Example 8

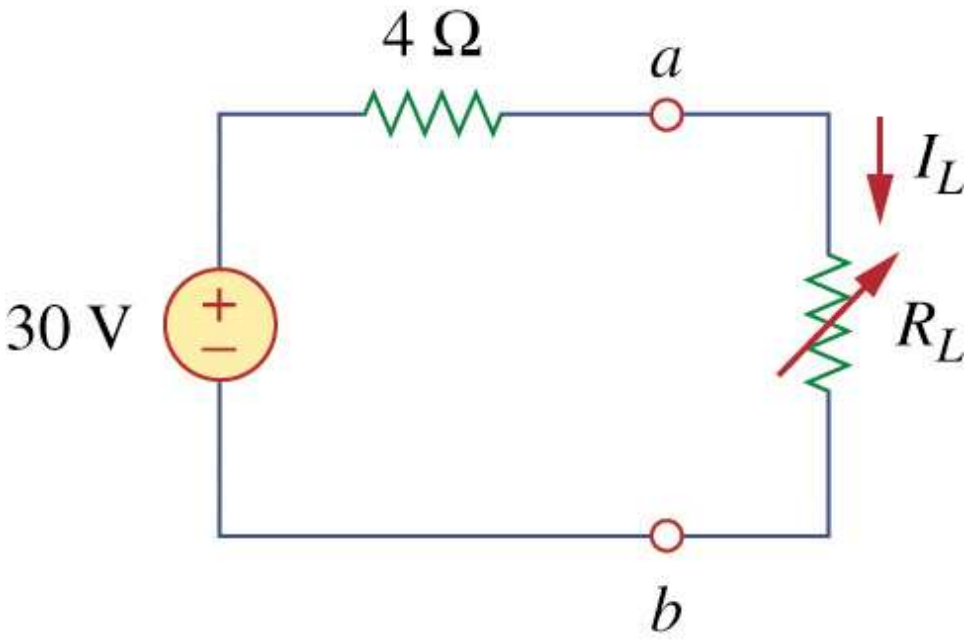

Example 8

To get i_L :

$$i_L = \frac{V_{\text{Th}}}{R_{\text{Th}} + R_L} = \frac{30}{4 + R_L}$$

$$R_L = 6 \rightarrow I_L = 30/10 = 3\text{A}$$

$$R_L = 16 \rightarrow I_L = 30/20 = 1.5\text{A}$$

$$R_L = 36 \rightarrow I_L = 30/40 = 0.75\text{A}$$

★ **Find the Thevenin's equivalent circuit of the circuit shown in Fig , to the left of the terminals *a-b*.**

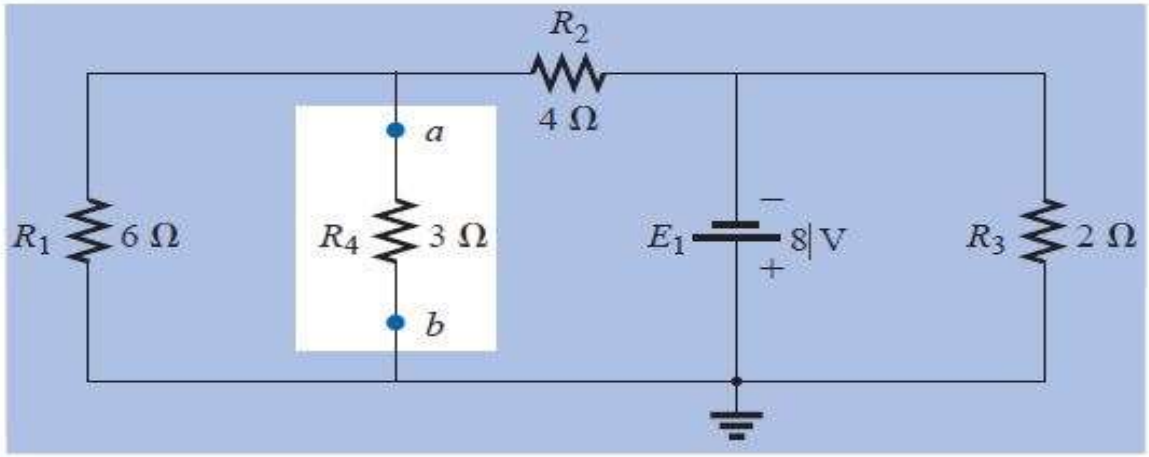

Answer:

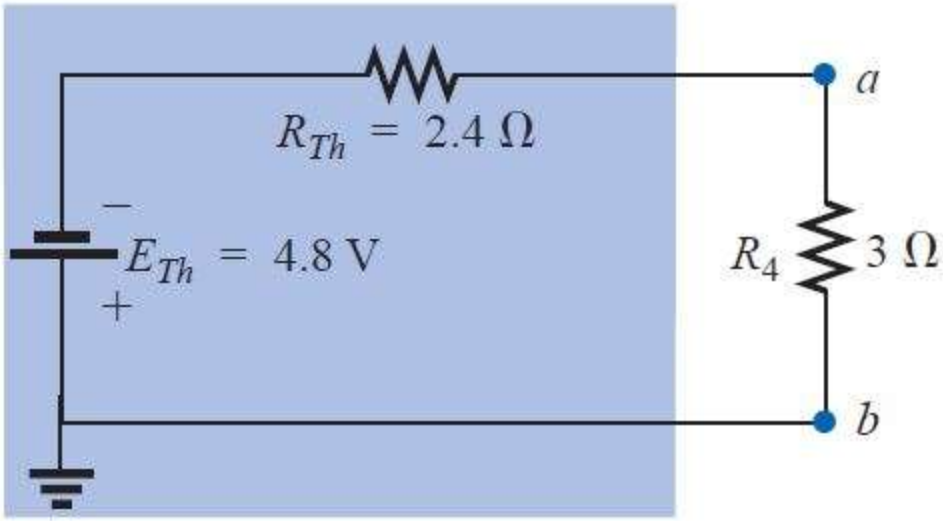

★ **Find the Thevenin's equivalent circuit of the circuit shown in Fig , to the left of the terminals *a-b*.**

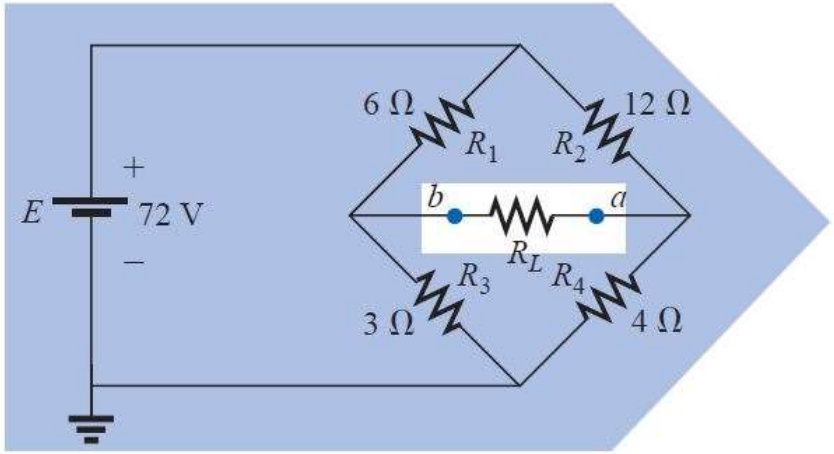

Answer:

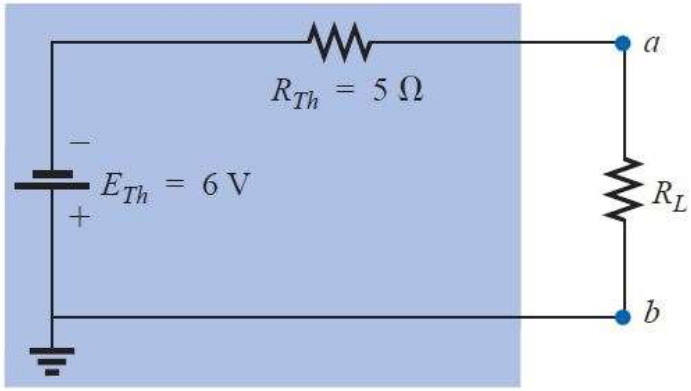

Norton's Theorem

★ **Norton's theorem states that a linear two-terminal circuit can be replaced by equivalent circuit consisting of a current source I_N in parallel with a resistor R_N where I_N is the short-circuit current through the terminals and R_N is the input or equivalent resistance at the terminals when the independent source are turn off.**

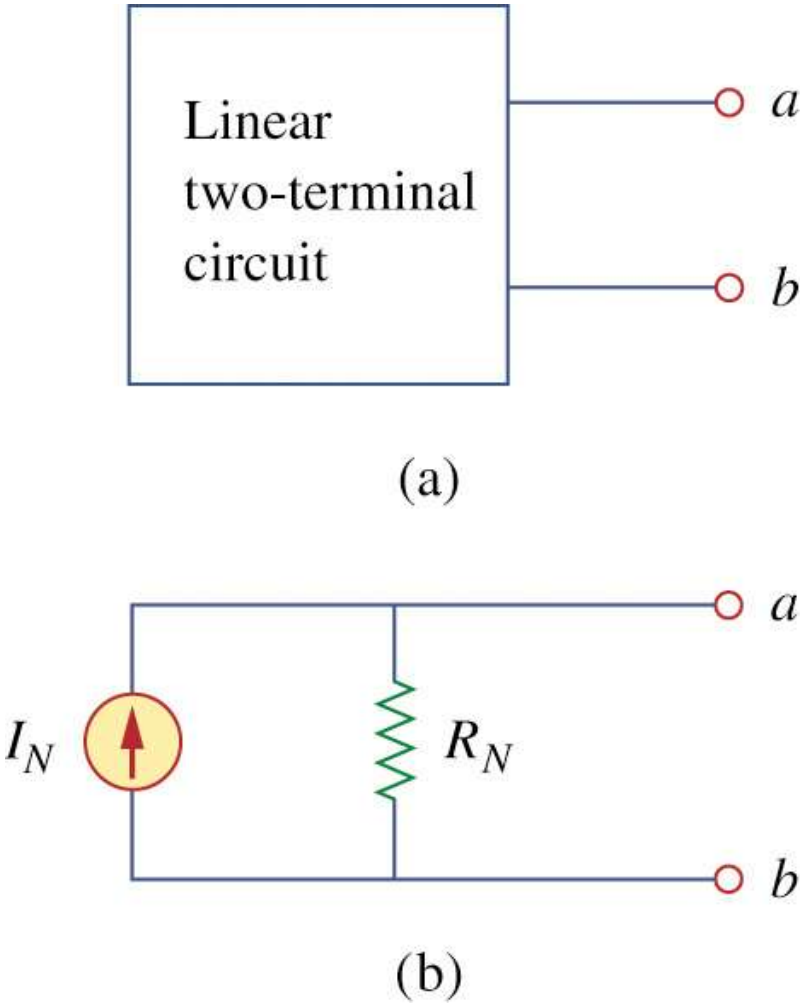
Linear
two-terminal
circuit
a
b
(a)
I_N
R_N
a
b
(b)

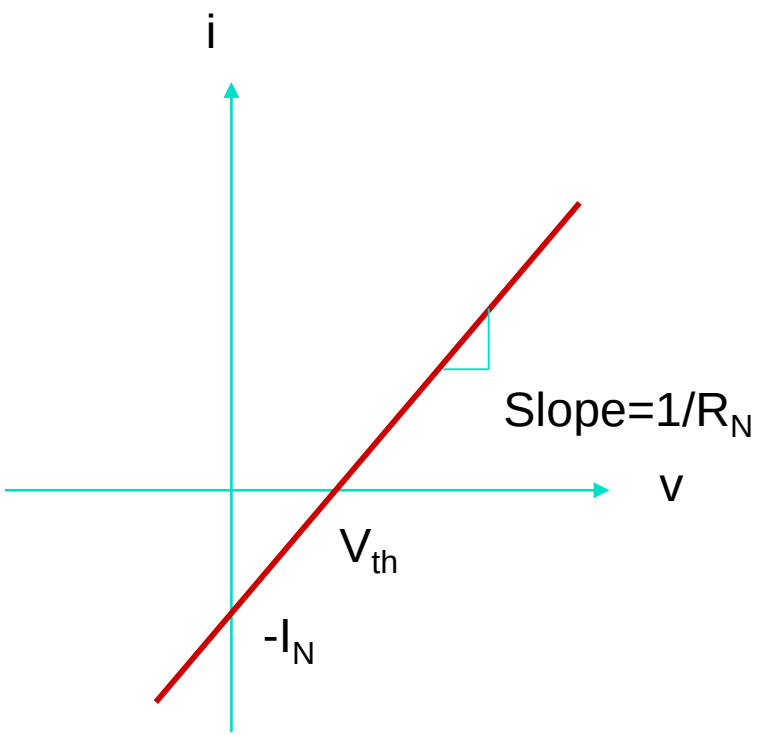
i
Slope=1/R_N
v
V_{th}
-I_N

How to Find Norton Current

★ **Thevenin and Norton resistances are equal:**

$$R_N = R_{\text{Th}}$$

★ **Short circuit current from *a* to *b* :**

$$I_N = i_{sc} = \frac{V_{\text{Th}}}{R_{\text{Th}}}$$

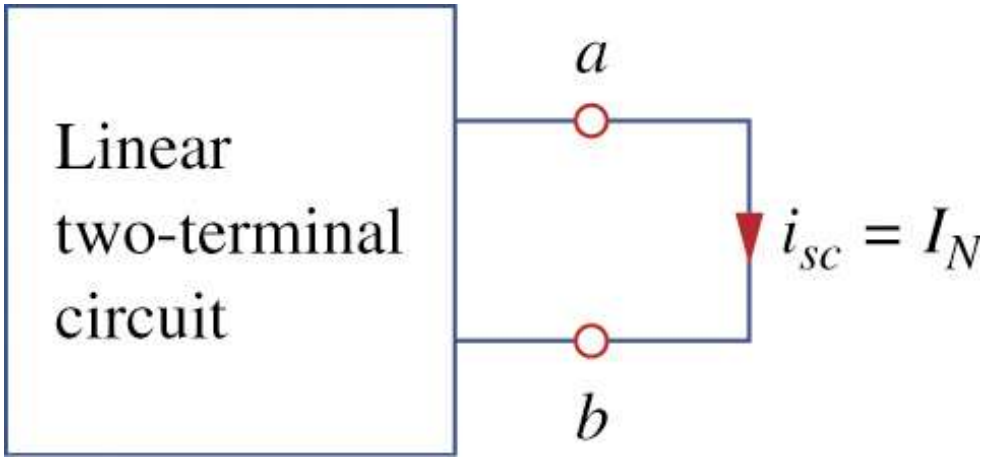

Thevenin or Norton equivalent circuit :

- ★ **The open circuit voltage v_{oc} across terminals *a* and *b***
- ★ **The short circuit current i_{sc} at terminals *a* and *b***
- ★ **The equivalent or input resistance R_{in} at terminals *a* and *b* when all independent source are turn off.**

$$V_{Th} = v_{oc}$$

$$I_N = i_{sc}$$

$$R_{Th} = \frac{V_{Th}}{R_{Th}} = R_N$$

Example

★ **Find the Norton equivalent circuit of the circuit in Fig .**

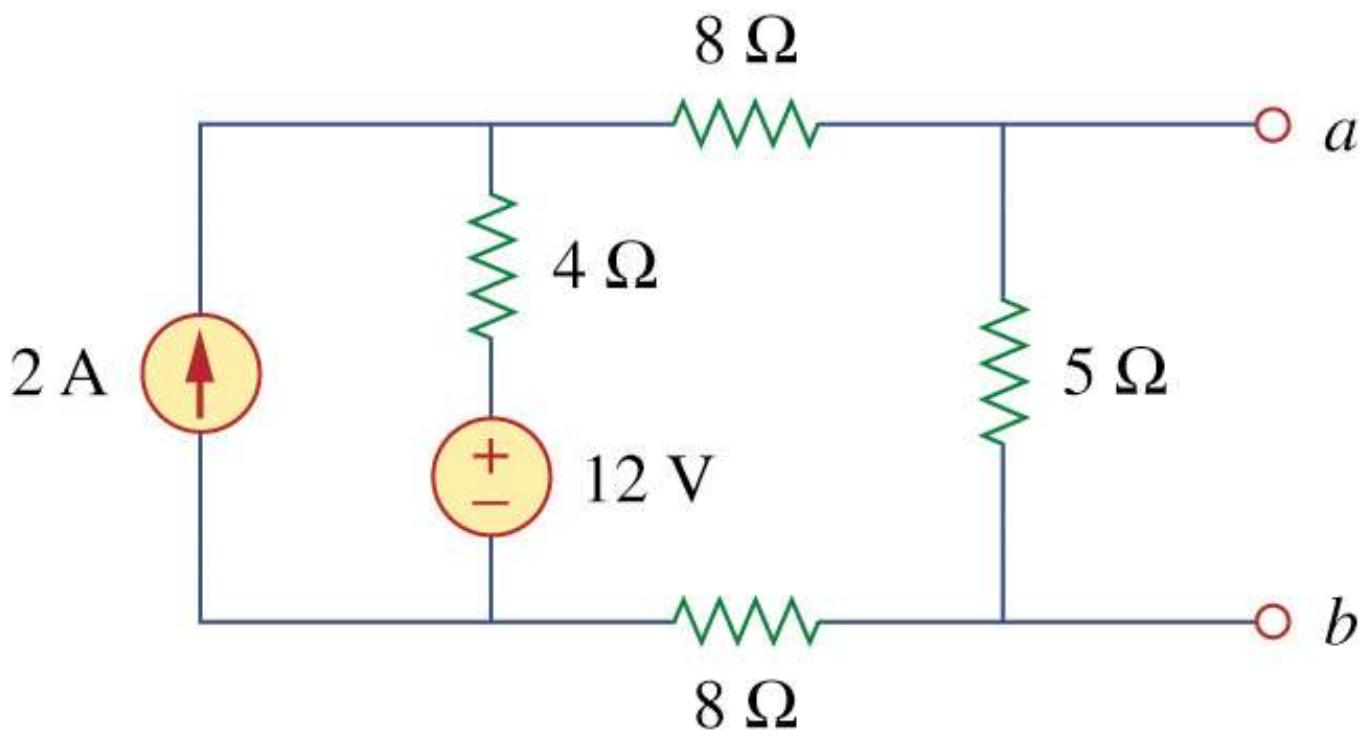

To find R_N Fig(a):

$$R_N = 5 \| (8+4+8)$$

$$= 5 \| 20 = \frac{20 \times 5}{25} = 4\Omega$$

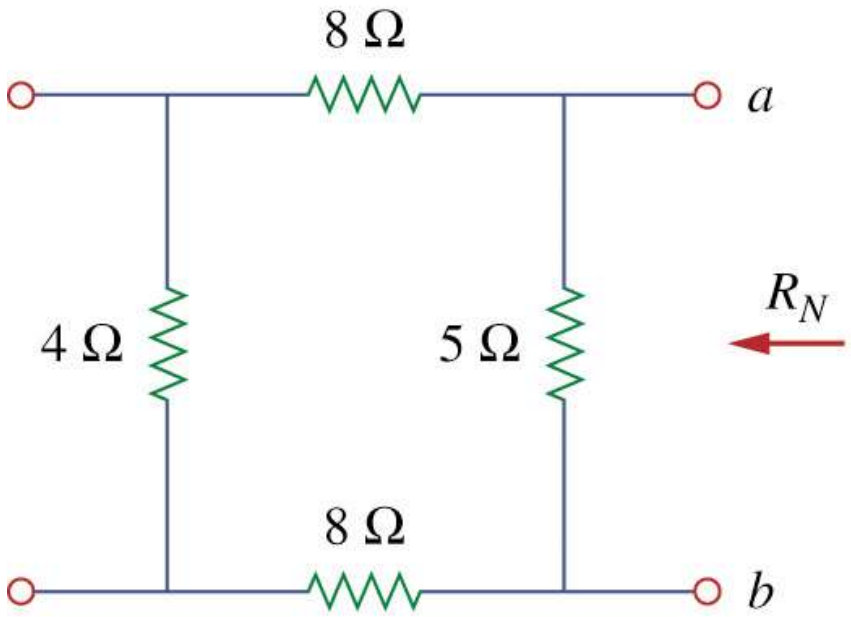

(a)

Example 11

To find i_N

short – circuit terminals a and b.

Mesh :

$$i_1 = 2\text{A},$$
$$12 - 4(i_2 - i_1) - 4i_2 - 4i_2 = 0$$
$$12 = 20i_2 - 4i_1$$
$$12 = 20i_2 - 4 \times 2$$
$$20 = 20i_2$$

$$i_2 = 1\text{A} = i_{sc} = I_N$$

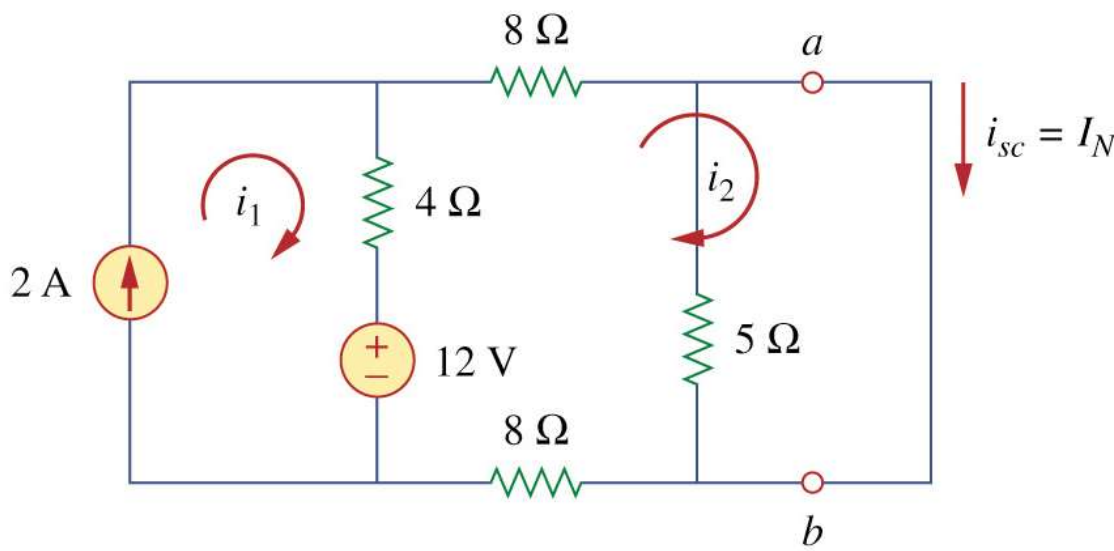

(b)

Alternative method for I_N

$$I_N = \frac{V_{Th}}{R_{Th}}$$

V_{Th}: open – circuit voltage across terminals a and b

$Fig(c)$:

Mesh analysis :

$i_3 = 2A, \quad 25i_4 - 4i_3 - 12 = 0$

$\therefore \; i_4 = 0.8\text{A}$

$\therefore v_{oc} = V_{Th} = 5i_4 = 4\text{V}$

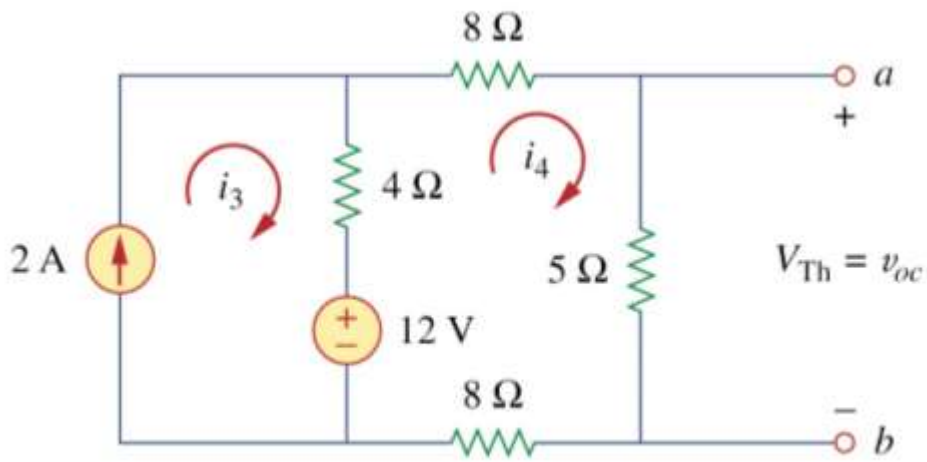

(c)

Hence,

$$I_N = \frac{V_{Th}}{R_{Th}} = 4/4 = 1\text{A}$$

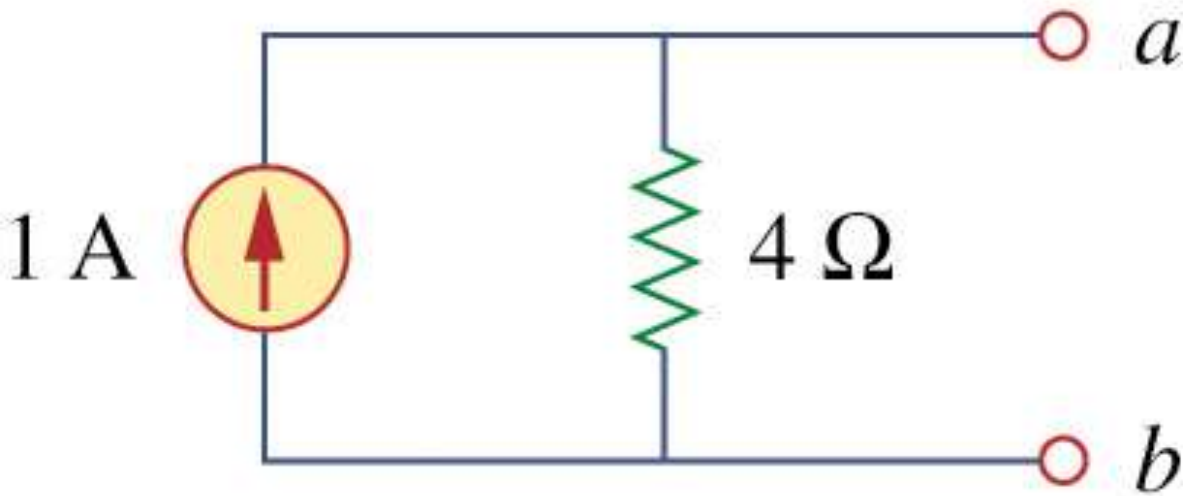

★ **Fi the Norton equivalent circuit of the circuit in Fig .**

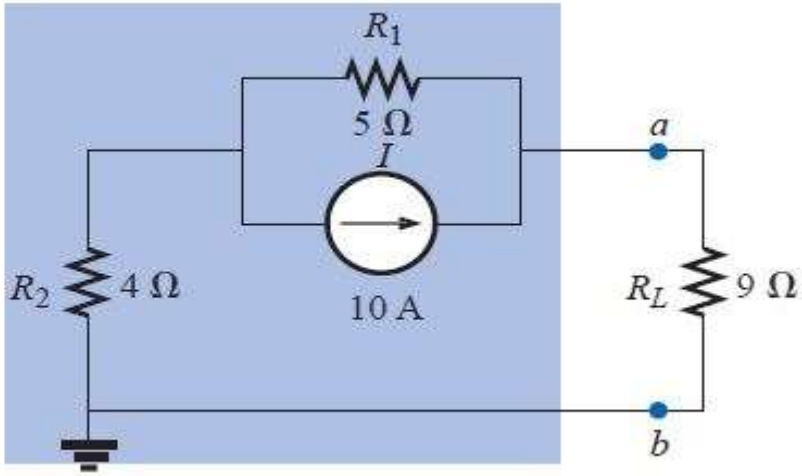
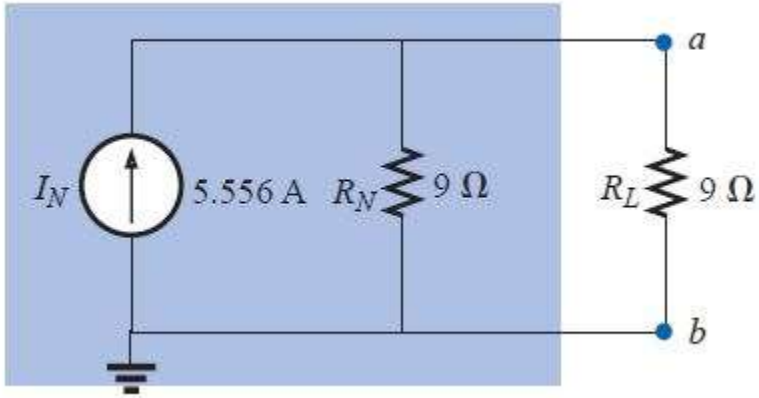
Answer